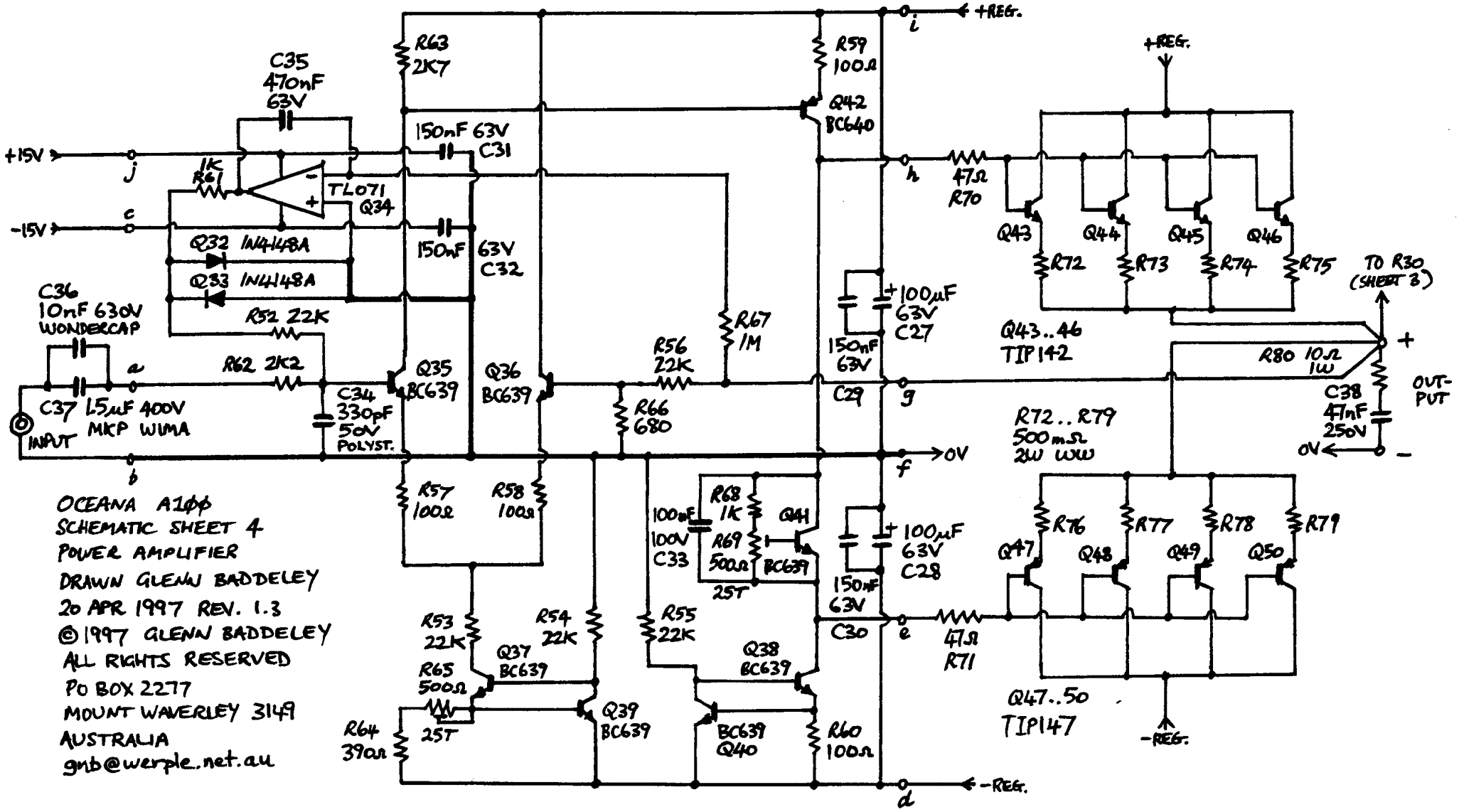

OCEANA A1ϕϕ
SCHEMATIC SHEET 4
POWER AMPLIFIER
DRAWN GLENN BADDELEY
20 APR 1997 REV. 1.3
© 1997 GLENN BADDELEY
ALL RIGHTS RESERVED
PO BOX 2277
MOUNT WAVERLEY 3149
AUSTRALIA
gnb@werple.net.au