OCEANA A100
SCHEMATIC SHEET 3
REGULATOR P.C.B.
DRAWN GLENN BADDELEY 20 MAR 1997 REV. 1.3

© 1997 GLENN BADDELEY
ALL RIGHTS RESERVED
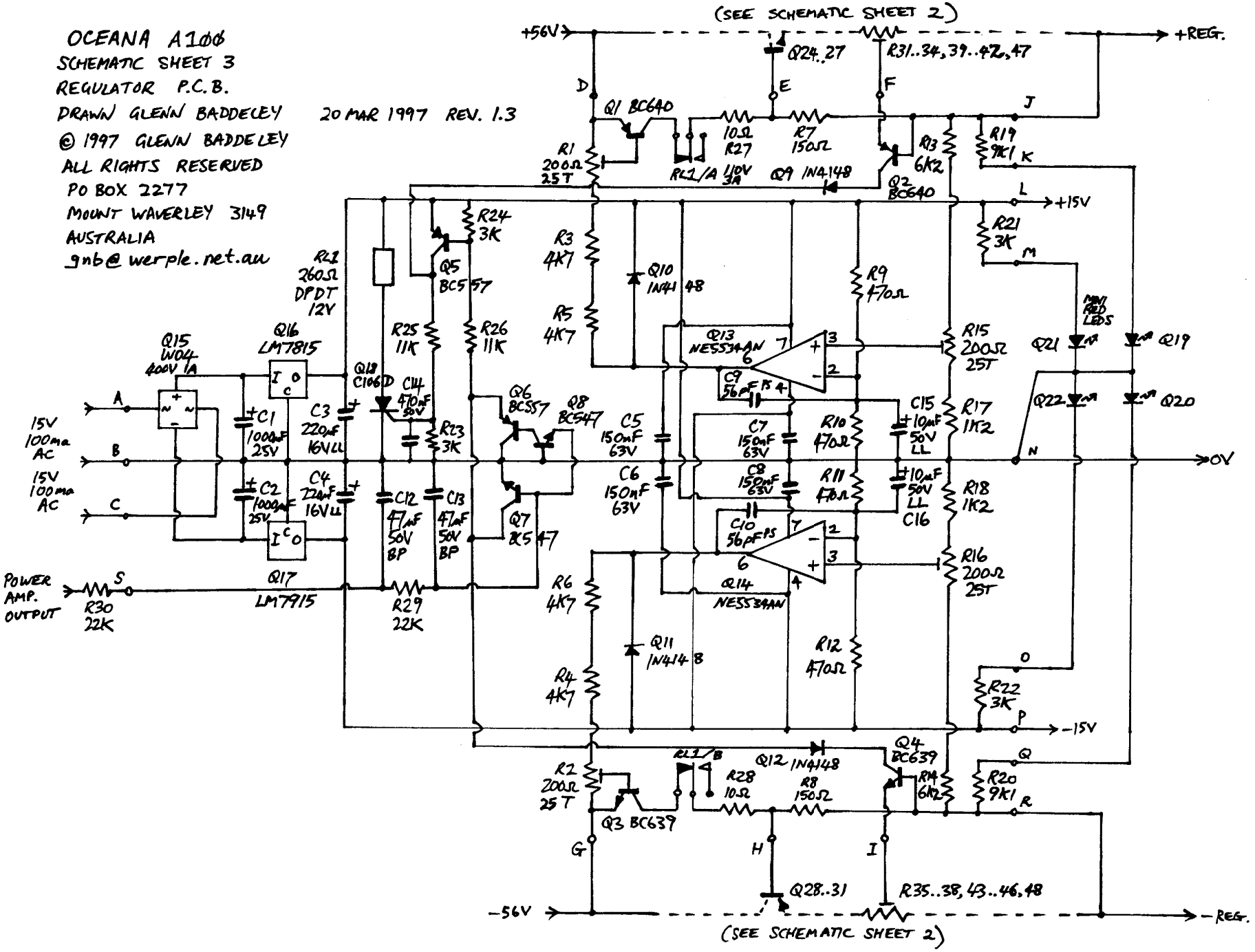
PO BOX 2277
MOUNT WAVERLEY 3149
AUSTRALIA
gnb@werple.net.au